D1RFRD006

REVISION RECORD				
REV	ECO	DESCRIPTION	DRFT	DATE
1		修改刻字	LJH	11/10/08"
2	10-0334	修改参数	ZXX	10/04/10"

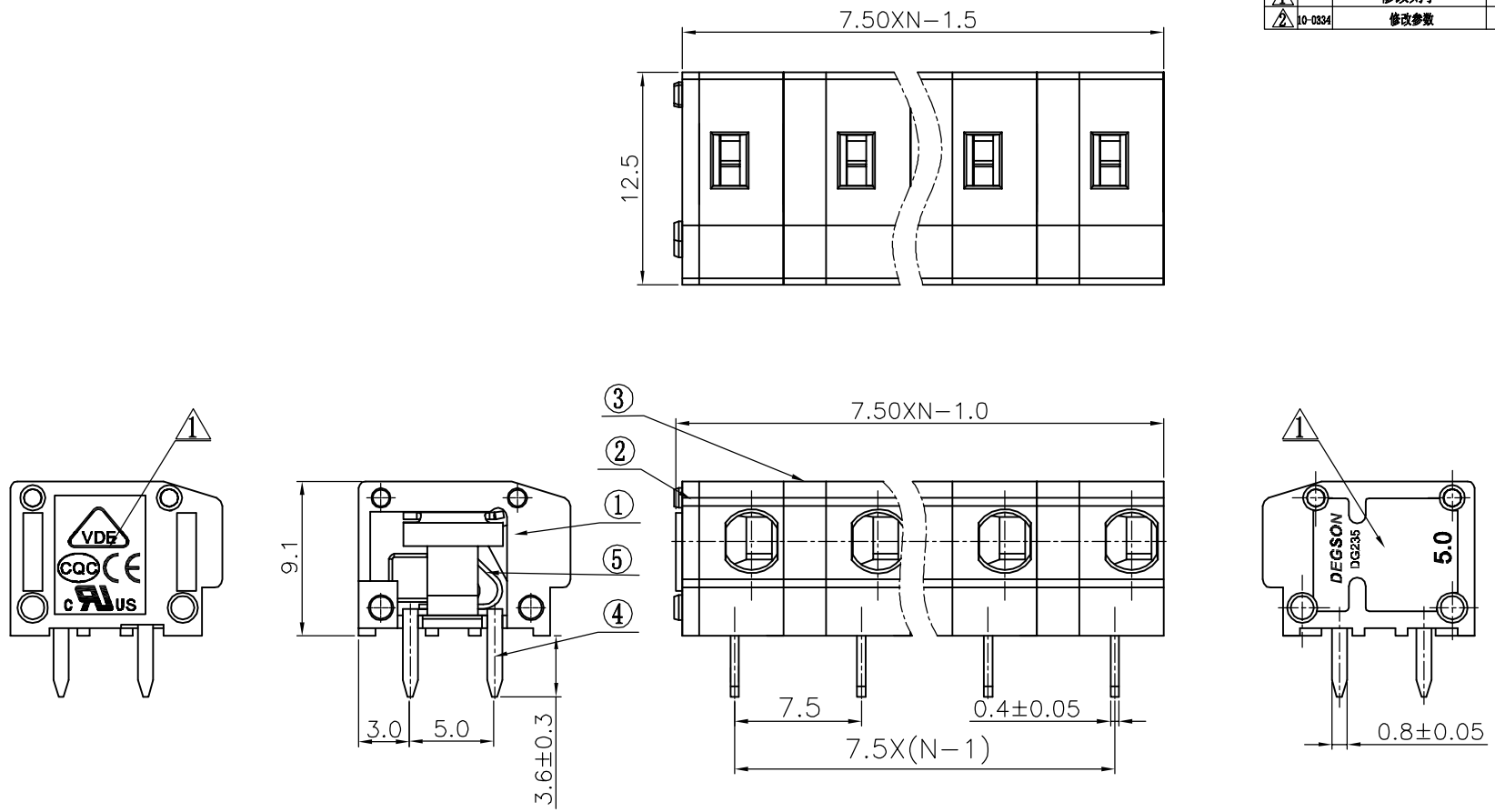

Notes:

1. Pitch:7.5mm ,Poles:2-XXP
2. Rated voltage/current:UL 300V/10A
   VDE 450V/15A 2
3. Operation temperatures:-40℃～+105℃
4. Withstanding Voltage:AC2000V/1Min
5. Insulation Resistance:5000MΩ/DC1000V
6. Wire Range:20～14AWG,0.2～1.5mm^2(str)
   0.2～2.5mm^2(sol) 2
7. Undimensioned Tolerances:

Pitch range in mm			Naminal dimension range in mm					
to 6	over 6 to 10	over 10 to 24	to 30	over 30 to 60	over 60 to 100	over 100 to 150	over 150	
±0.10	±0.15	±0.25	±0.2	±0.3	±0.5	±0.7	±1.0	0.05/10

ITEM	NAME OF PART	NO. OF PART	Q"TY	MATERIAL	NOTES
5	DG235-5.0-Spring	X000000140(H)	XX	Stainless Steel	
4	DG235-5.0-Pin header	3008B00010(H)	XX	Phosphor Bronze	SnCe plated
3	DG235-5.0 Calpboard	3008H0Y01A(H)	XX-1	PA66	UL94V-0
2	DG235-5.0 Cover	3008C0Y01A(H)	1	PA66	UL94V-0
1	DG235W-5.0 Housing	3012A0Y01A(H)	XX	PA66	UL94V-0

DETACHED LISTS

MM (INCH)

TOLERANCES EXCEPT AS NOTED

MM
.0 ±
.00 ±
.000 ±

ANGLES ± 1°

THIRD ANGLE PROJECTION

DFTO Linda	DATE 07/07/'07	
CHKD	DATE	
MFO	DATE	
APPVL	DATE	
MATERIAL :		
G.E :		
FINISH:		
SCALE : 1:1		

DEGSON® 宁波高正电子有限公司 DEGSON ELECTRONICS CO., LTD

NAME DG235W-7.5-XXP-1Y-00A(H)

DRAWING NO. DG235W-7.5-E01 /PART NO.

SIZE A3 REV T2 10/04/10"

DO NOT SCALE DRAWING SHEET 1 OF 1